WIN11
Weight Indicator

Installation & Operating Manual

Program 02 - Software release 0.3
4 Set-points controller

WIN11 TECHNICAL FEATURES

Power requirements	
Power supply	230 / 115 Vac 50/60 Hz - (12 Vdc optional)
Power consumption	7 Watts
Isolation	Class II
Environmental	
Operating temperature (outside air)	-10°C to +50°C (14°F to 122°F)
Storage temperature	-20°C to +60°C (-4°F to 140°F)
Relative humidity	85% non-condensing
Display	
Weight display	6 digit red LED's, 7 segments, 14 mm. high (0.55 inches)
Status LED's	8 red LED's, Ø 5 mm. (0.2 inches)
Keyboard	5 keys (tactile feedback)
Enclosure	
Overall dimensions	144 x 72 x 120 mm (5.67 x 2.83 x 4.72 inches) (L x H x D)
Panel cut-out	139 x 67 mm (5.47 x 2.63 inches)
Depth	135 mm (5.31 inches) (including terminal blocks)
Case	Noryl autoextinguishing (UL 94 V1)
Front panel protection degree	IP 54
Connections	Pull-out terminal blocks, pitch 5.08 mm (0.2 inches) - Power supply pitch 7.5 mm. (0.3 inches) - Serial ports on a 9 pin Sub-D
Performances	
Load cell excitation voltage	5 Vdc fixed, short circuit protected
Load current	120mA (max 8 x 350Ω load cells)
Input sensitivity	0.02 μV / count.
Linearity	< 0.01% of full scale
Temperature drift	< 0.0003% of full scale / °C
A/D converter resolution	24 bit
Display resolution	Up to 99.999 counts
Input signal range	From -3.9 mV/V to +3.9 mV/V
Digital filter	Selectable from 0.2 to 50 Hz
Weight decimal digits	0 to 4 decimal digits
Zero and Full Scale calibration	Data sheet or Dead weight.
Inputs & Outputs	
Logic outputs	4 relays (N.O. contact) max. load 115Vac/30Vdc, 0.5 A each
Digital inputs	3 opto-isolated 12Vdc/24Vdc PNP
Serial outputs	
Serial ports (nr. 2)	COM1: Rs232c half duplex COM2: Rs422/Rs485 half duplex.
Max. cable length	15m - 50 feet (Rs232c) 1000m - 3300 feet (Rs422 and Rs485)
Serial protocols	ASCII, Modbus RTU, Dot matrix printers (EPSON, CUSTOM)
Baud rate	1200, 2400, 4800, 9600, 19200, 38400, 115000 selectable
Programme code memory	60 Kbytes FLASH re-programmable on board via RS232
Data memory	4 Kbytes
Analog output	
Analog output (optional)	Voltage: 0 – 10 V / 0 – 5 V Current: 0 – 20 mA / 4 – 20 mA
Impedance	Voltage: min. 10KΩ Current: max. 300Ω
Resolution	16 bits
Linearity	0.03% of full scale
Temperature drift	0.001% of full scale / °C
Calibration method	Digital (via keyboard)
Analog input (optional)	As alternative to the 3rd digital input
Resolution	10 bits
CE	
Conformity to Standards	EN61000-6-2, EN61000-6-3, EN61010-1

SYMBOLS

A list of the symbols used in the manual to attract the reader's attention follows below:

Caution! Risk of electric shock

Caution! Specialized personnel only must perform this operation

Read the following instructions carefully

Further information

WARNINGS

An isolation switch must be installed near the instrument in order to be able to cut the power supply at any time

To clean the instrument use a cloth with pure alcohol both for the enclosure and the keyboard. During the cleaning procedure the instrument must be switched off.

Environmental pollution degree: 2

REMARKS

This manual aims to use texts and figures in order to provide the operator with instructions and information about the basic criteria for the installation and correct use of the instrument.

- Specialized personnel should only install the instrument, after having read and understood this manual. By "specialized personnel", we mean personnel who, due to specific training and professional experience, have been expressly authorized by the system safety manager to carry out the installation.
- Do not power the instrument with voltage outside the limits specified in the characteristics.
- The user is responsible for ensuring that the installation conforms to relative current regulations.
- In the case of anomalies, contact the nearest Service Centre. Any unauthorized attempt at dismantling or modifying the instrument will void the warranty and relieve the Manufacturer of all responsibility.
- The appliance has been designed and manufactured for use in weighing and dosage processes. Any improper use will relieve the Manufacturer of all responsibility.

CONTENTS

SECTION 1 - INSTRUMENT INSTALLATION

WARNINGS

- **Specialized personnel only is authorized to carry out the following procedures.**
- **All the connections must be done when the instrument is switched off.**

INSTRUMENT ASSEMBLY

The instrument is installed as a panel in a cavity with a panel cut-out of 139 x 67 mm and fixed into place with the 2 turnbuckles provided.

- An isolating switch must be installed near the instrument in order to be able to cut the power supply at any time.

- Consider that the depth of the instrument, with the pull-out terminal blocks assembled, is 135 mm. and the necessary space must be reserved for the connections.
- Do not install the instrument near high power devices (engines, inverters, contacts, etc.) or devices that do not meet CE standards for electromagnetic compatibility.
- The length of the wires for the load cells cannot exceed 140 m/mm².
- The length of the RS232 cable cannot exceed 15 meters (EIA RS-232-C standards).
- The length of the RS422 cable cannot exceed 1000 meters.
- Take care of the warnings given in the following pages about the connection of the individual peripherals.

It is important to provide these data when requesting information or instructions regarding the instrument, along with the program number and the software version (4 Set-points or Batch), which are shown on the manual cover and are displayed when the instrument is switched on.

REAR PANEL

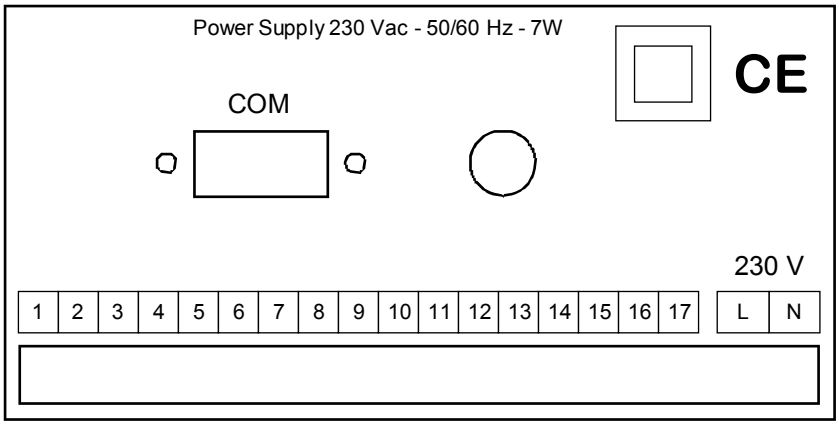

To match with standards and in order to facilitate the installation process, some instructions are printed on the back of the instrument .

INSTRUMENT POWER SUPPLY

- The instrument is powered through the **L** and **N** terminals.
- The power supply cable must be channelled separately from other power supply cables with different voltages, from the load cells cables and I/O cables.

Power supply voltage: 230 Vac - 50/60 Hz - 7 W
Fuse: 250 V - T - 50 mA - 5x20 mm. - Delayed fusion

2 pin "**L N**" TERMINAL BLOCK, pitch 7.5 mm (0.3 inches)

L LINE
N NEUTRAL

Since the instrument is a **Class II** device (**double isolation**) the ground is not present on the power supply terminal block, however the ground is needed to connect the shield of the other cables (load cells, serial lines, analog output, etc…), therfore check for the presence of a valid ground protection.

LOAD CELLS CONNECTION

- The load cell cable must not be channelled with other cables (i.e. outputs connected to remote switches or power supply cables), but must follow its own route.
- Any cable extension must be carefully shielded and the color code must be respected

- The extensions on the load cells cable must be soldered, unless a summing junction box is used.
- The load cell cable shouldn't have more conductors than those effectively used (4 or 6). In case of a 6 wires cable, in which only 4 are used (**excitation +** and **-**, **signal +** and **-**), connect the **sense +** and **-** wires to the respective polarities of the **excitation** wires.

A maximum of 8x350-ohm load cells can be connected to the instrument in parallel. The load cell excitation voltage is 5 Vdc and is protected against a temporary short circuit. The instrument's input signal range requires the use of load cells with sensitivity from 1 mV/V to 3.9 mV/V.
The load cell wires must be connected to terminals 1 to 6 of the pull-out 17 pin terminal block.

4 WIRES CONNECTION

1. EXCITATION -
2. EXCITATION +
3. Connect to terminal #2
4. Connect to terminal #1
5. SIGNAL -
6. SIGNAL +

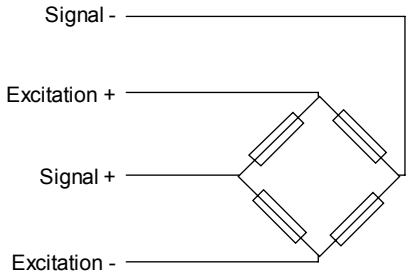

6 WIRES CONNECTION

1. EXCITATION -
2. EXCITATION +
3. SENSE +
4. SENSE -
5. SIGNAL -
6. SIGNAL +

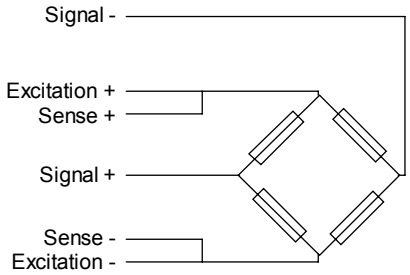

DIGITAL INPUTS CONNECTION (17 PIN TERMINAL BLOCK)

The digital inputs are electrically isolated from the instrument through opto-isolators.

- The digital inputs connection cable must not be channeled with power supply cables
- Use the shortest possible connection cable

The digital inputs activate when the 24 Vdc coming out from the pin #12 is applied to pins 9, 10 or 11.

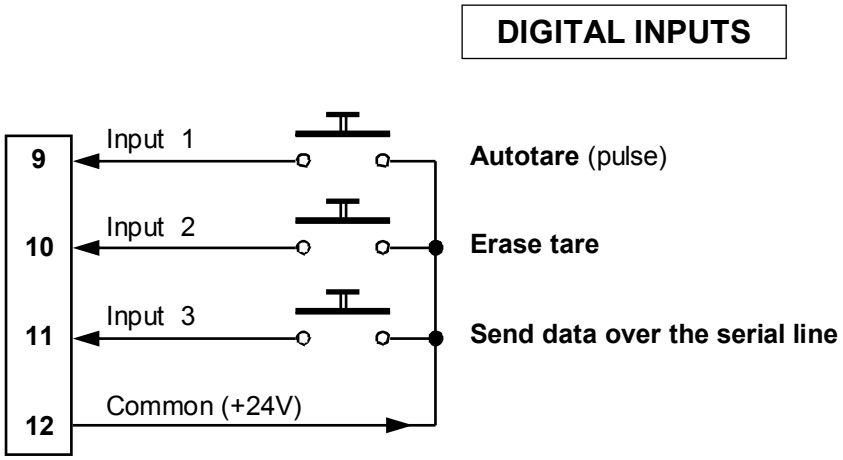

RELAY OUTPUTS CONNECTION (17 PIN TERMINAL BLOCK)

The relay outputs are electrically isolated from the instrument and are provided on relays with one single common. The contact rate is 0.5 A / 24 Vdc or 115 Vac. The contact closes when the output enables.

The wiring diagram follows below:

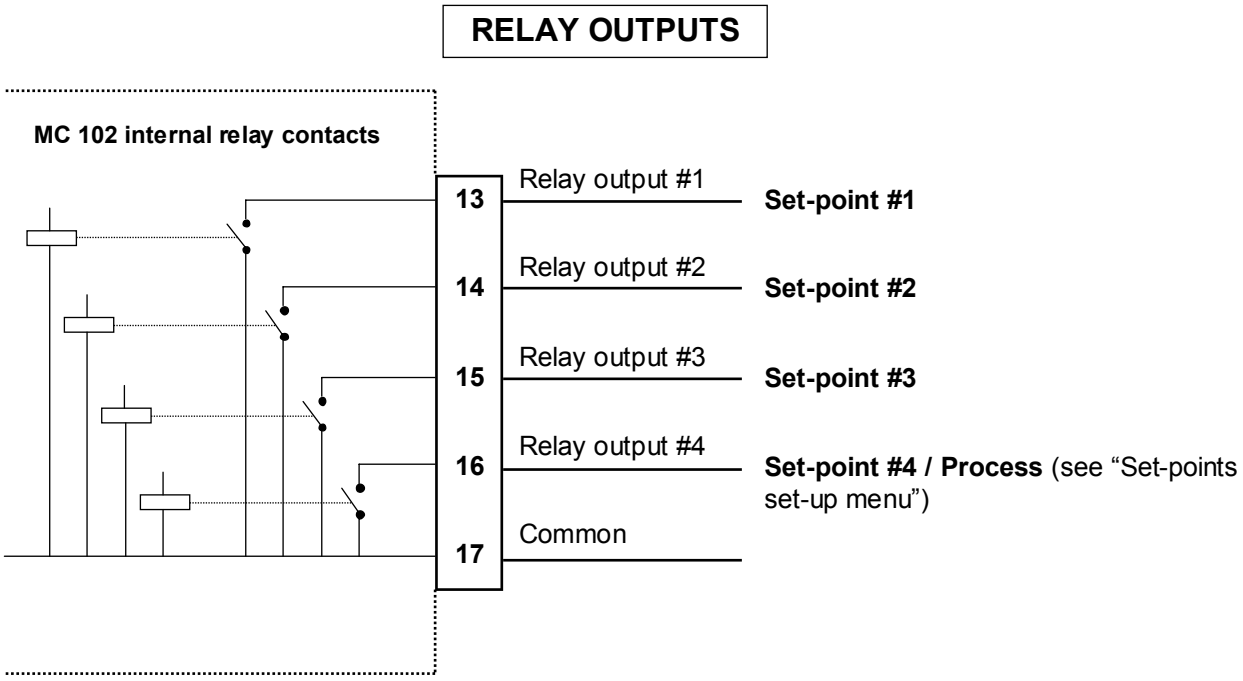

RS232 SERIAL CONNECTION TO A PC

- For the serial connection use a shielded cable, making sure that only one of the two shield ends is grounded. If the cable has more conductors than those used, connect the free conductors to the shield.

- The length of the RS232 cable cannot exceed 15 meters (50 feet) (EIA RS-232-C standards); for longer distances the RS422 or RS485 output must be used (see page 9); otherwise, in case the RS422 or 485 are not available, the SC 600 serial converter can be used (see page 10).
- The cable must not be channeled with other cables (i.e. power supply cables), but must follow its own route
- The PC used for the connection must conform to the EN 60950 standard.

The diagrams here below show the connection of the instrument both to a 25 and to a 9 pin connector:

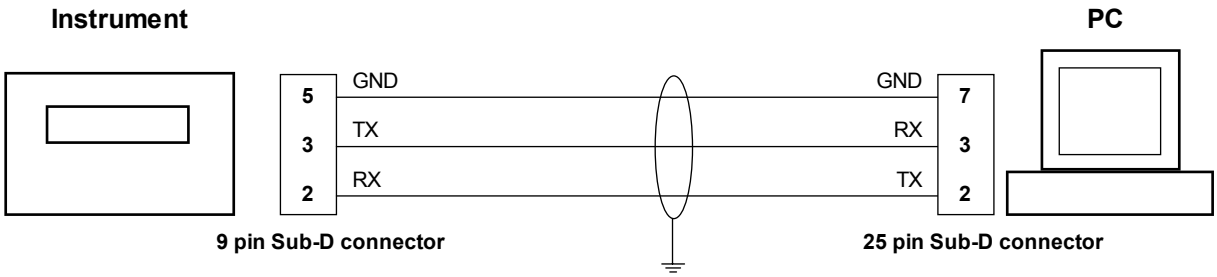

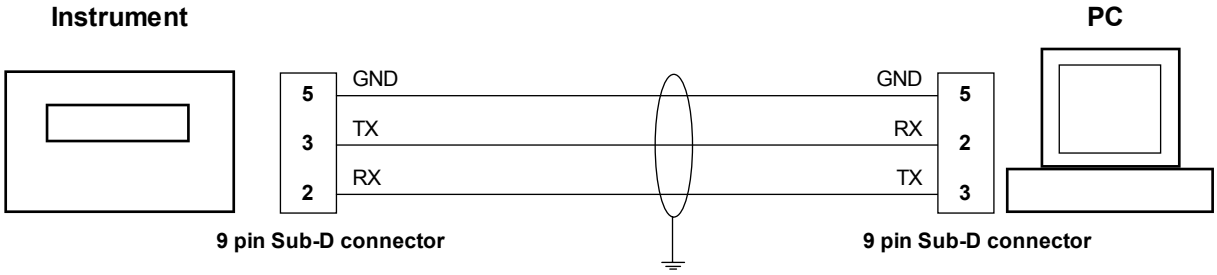

RS422 AND RS485 SERIAL CONNECTION

The RS422/485 serial transmission allows a cable length of up to 1000 meters (3300 feet) and a connection of up to 32 instruments to a Master unit such as PC (Personal Computer), PLC (Programmable Logic Controller) or DCS (Distributed Control System).
Use a dedicated serial communication cable: one twisted pair for RS485, two for RS422.
The connections are shown on the following page:

RS422 OUTPUT

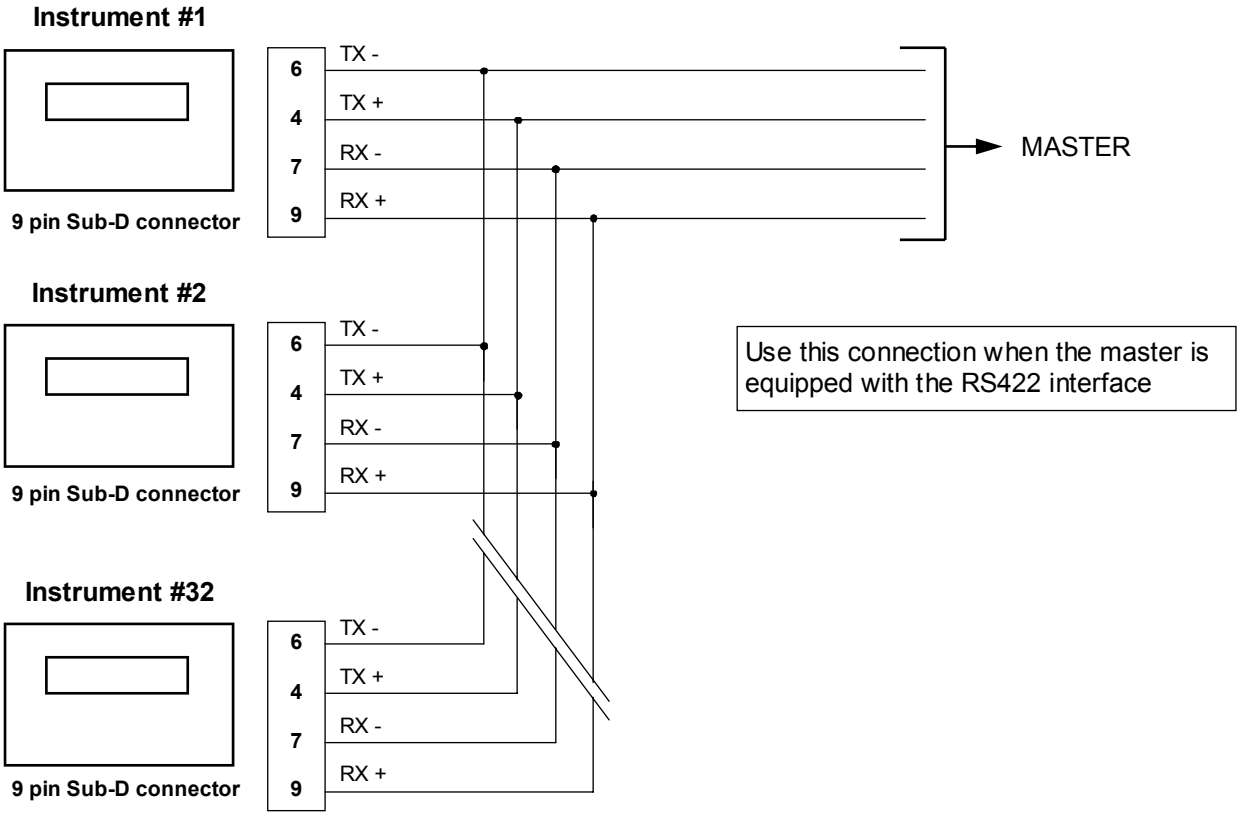

RS485 OUTPUT

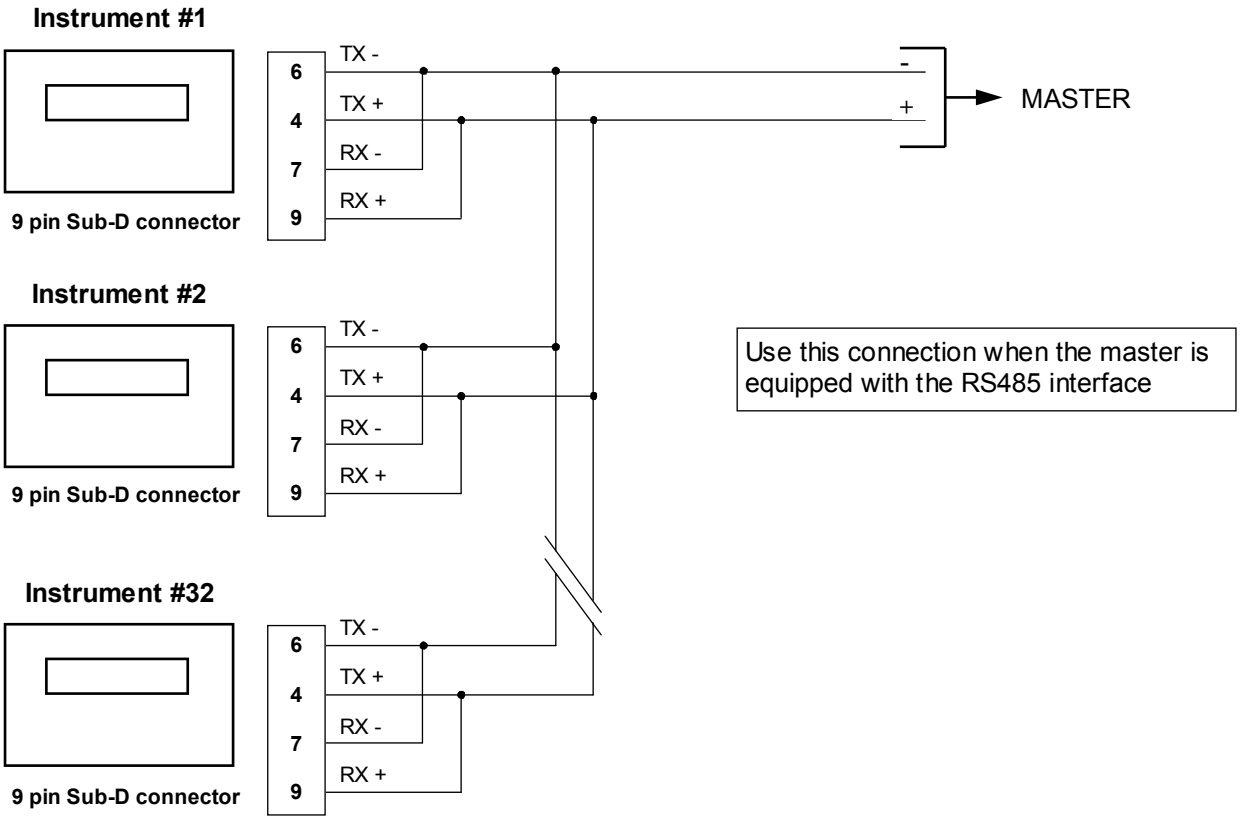

RS422 or RS485 OUTPUT THROUGH THE SC 600 SERIAL CONVERTER

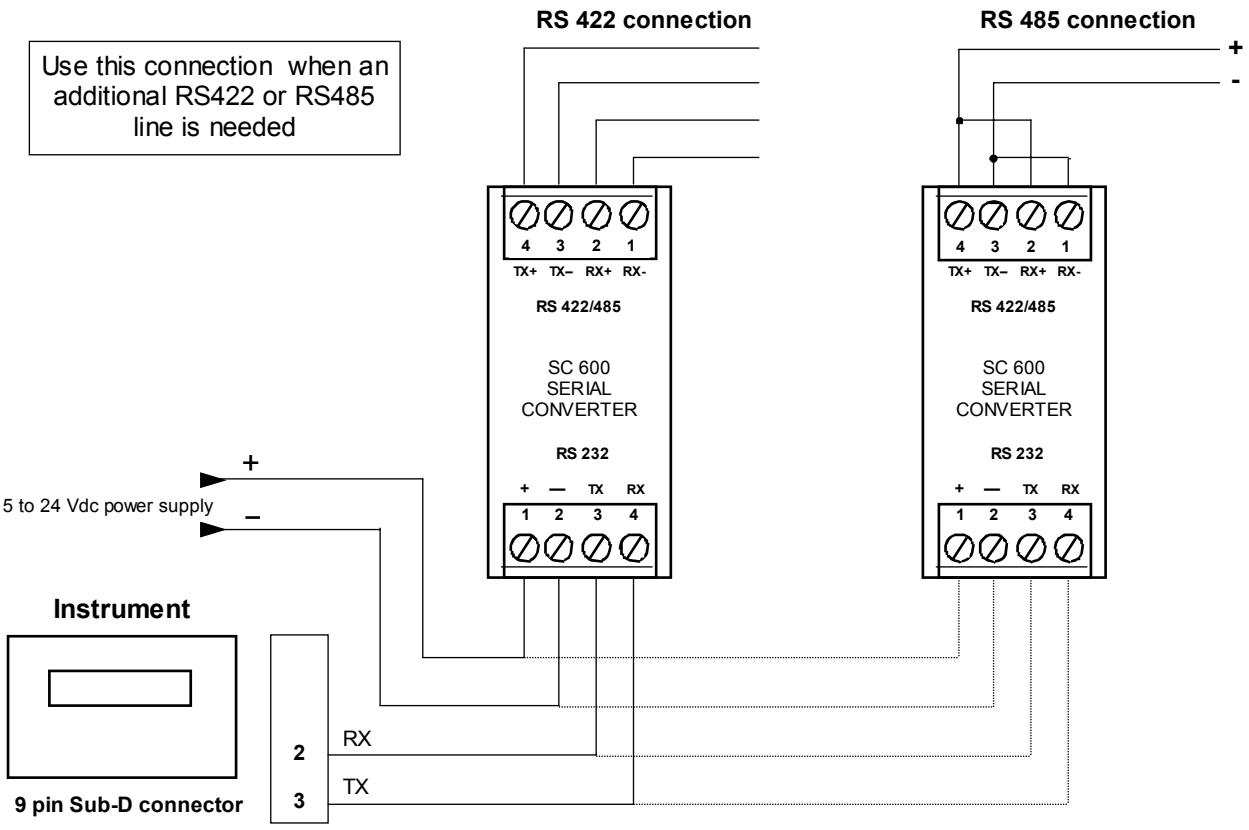

RS232 OUTPUT THROUGH THE SC 600 SERIAL CONVERTER

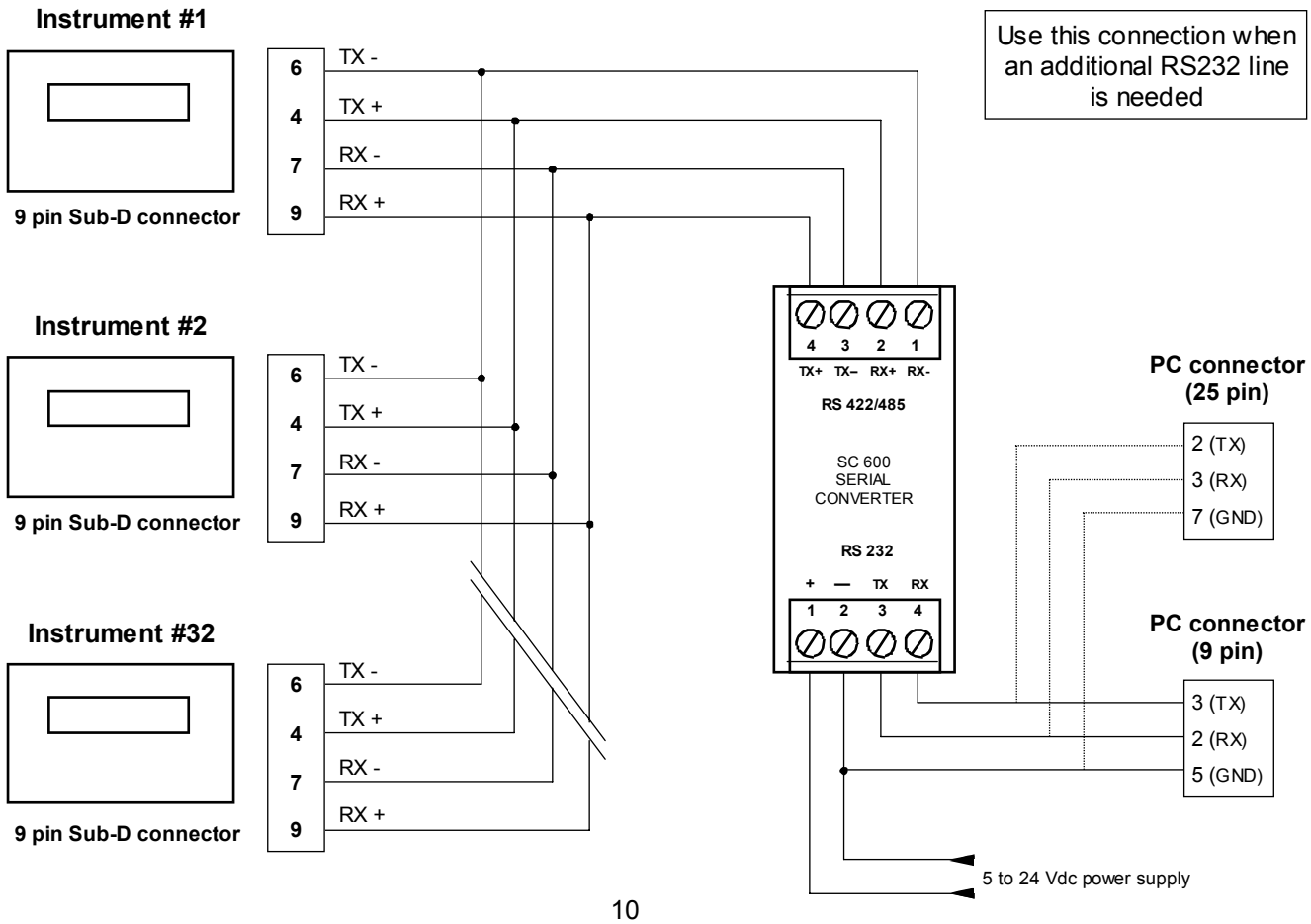

RS485 SERIAL CONNECTION TO REMOTE DISPLAYS (option)

- In case of connection to a remote display, a single twisted pair cable (TX+, TX-) can be used.
- The cable must not be channeled with other cables (i.e. power supply cables), but must follow its own route.

CONNECTION TO MOD. H60 REMOTE DISPLAYS (digits = 60 mm high - 2.36”)

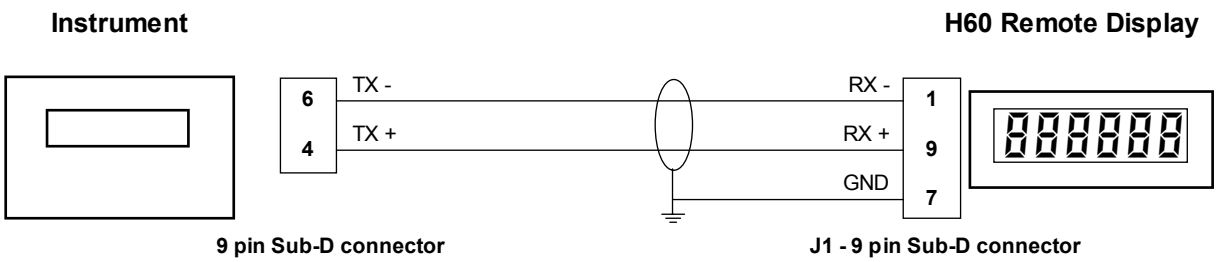

CONNECTION TO MOD. H100 REMOTE DISPLAYS (digits = 100 mm high - 3.94”)

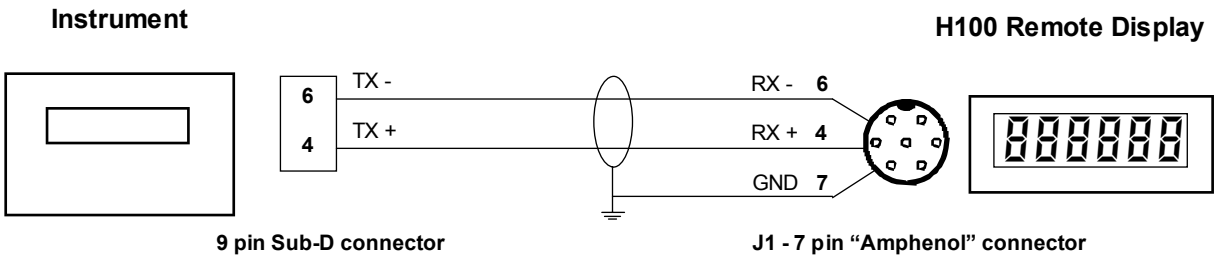

RS232 SERIAL CONNECTION TO A PANEL MOUNT PRINTER (option)

The panel mount printer (Mod. Custom P190) must be equipped with Rs232 serial interface. Consult the relative manual for the correct setting of the dip-switches on the printer's serial interface card.

- The length of the RS232 cable between the instrument and the printer cannot exceed 15 meters (50 feet)
- A male 25 pin Sub-D connector must be used for the RS232 cable on the printer's side.

- Use a shielded cable, making sure that only one of the two shield ends is grounded. If the cable has more conductors than those used, connect the free conductors to the shield.
- The cable must not be channeled with other cables (i.e. power supply cables), but must follow its own route.
- Use a dedicated power supply to power the printer.

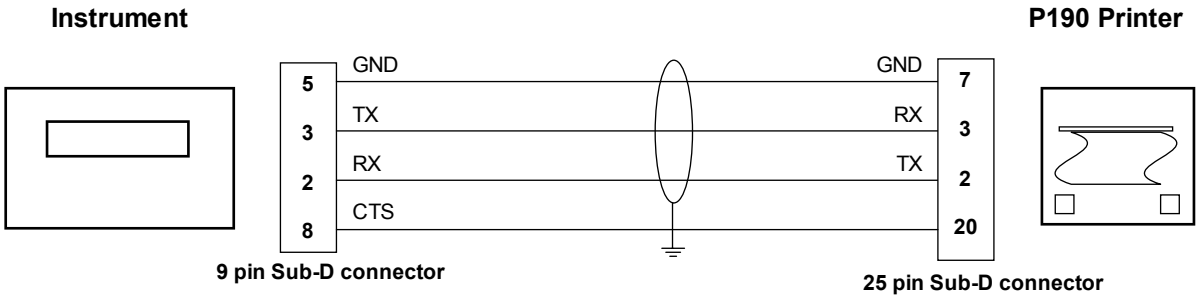

RS232 SERIAL CONNECTION TO A DOT-MATRIX PRINTER

The printer must be equipped with the RS232 interface and must be configured according the following parameters:

- **Baud rate:** 9600 bps
- **Data bits:** 8
- **Start bit:** 1
- **Stop bit:** 1
- **Parity:** NO
- **Handshaking:** DTR protocol

Consult the printer's manual for the correct selections.

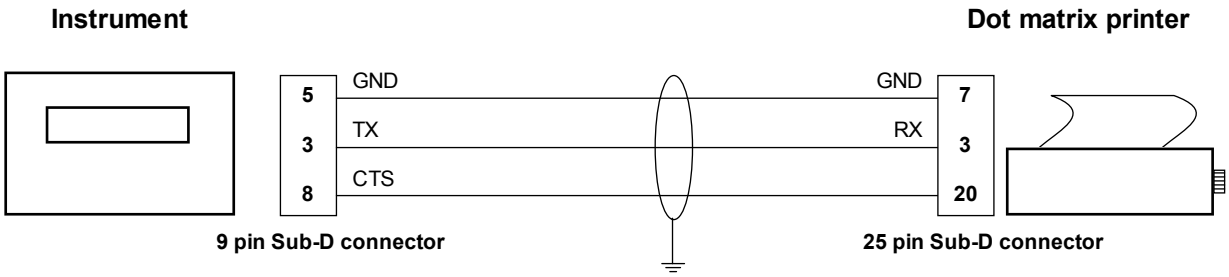

RS232 SERIAL CONNECTION TO BCD OUTPUT BOARD

- For the serial connection use a shielded cable, making sure that only one of the two shield ends is grounded. If the cable has more conductors than those used, connect the free conductors to the shield.
- The length of the cable between the instrument and the BCD output board cannot exceed 15 meters (50 feet). The cable must not be channeled with other cables (i.e. power supply cables), but must follow its own route.

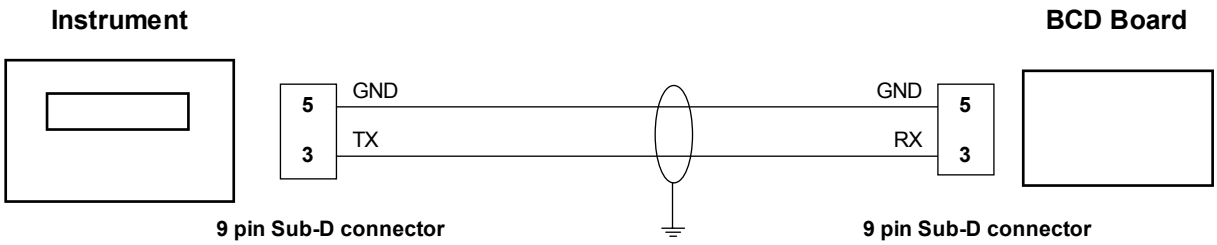

OPTIONAL ANALOG OUTPUT CONNECTION

When having this hardware configuration, the instrument gives an opto-isolated analog output. The analog output can be selected as **Voltage** or **Current.**

Features:

- **Voltage** analog output: **0 to 5 V** or **0 to 10 V** — Minimum load: 10 kΩ
- **Current** analog output: **0 to 20 mA** or **4 to 20 mA** — Maximum load: 300 Ω

- Use a shielded cable for the analog output connection, making sure that only one of the two shield ends is grounded.
- The analog transmission is particularly sensitive to electromagnetic disturbances. We therefore recommend to use the shortest possible cable length and channel the cable separately from power cables.

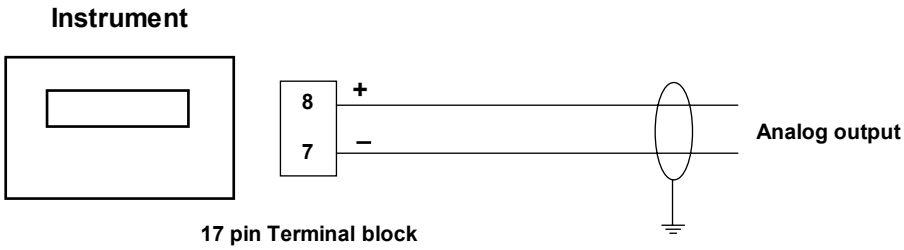

OPTIONAL ANALOG OUTPUT TYPE MODIFICATION

The analog output type (voltage or current) is normally decided in the factory before shipping the instrument and according to the customer's requests. It is however possible to change this setting by moving a jumper bridge on the instrument's main board (S135).

- **Warning! Only qualified personnel is permitted to perform this procedure under the Manufacturer's authorization.**
- **Disconnect the instrument from the power supply before proceeding.**
- **Non-observance of these regulations will void the instrument's warranty and relieve the Manufacturer of all responsibility.**

Analog output type modification procedure:

1. Disconnect the instrument from the power supply
2. Disconnect the pull-out terminal blocks and the 9 pin Sub-D connector from the rear side of the instrument
3. Remove the back frame and the cover by acting on the side tongues
4. Take out the boards from the rear side of the enclosure
5. The main board (S135) topography is shown here below
6. The jumper bridge **JP4** indicates the type of analog output selected in the factory (see picture below)
7. Position the jumper bridge **JP4** according to the analog output type needed
8. Insert the boards in the enclosure
9. Insert the back frame and the cover
10. Connect the pull-out terminal blocks and the 9 pin Sub-D connector
11. Power the instrument and enter the parameters to configure the analog output.

When the analog output is changed from voltage to current or vice versa, disconnect the digital meter and reconnect it with the right setting since an output in Volts with an ammeter in series could damage the circuit (causing the output to short circuit).

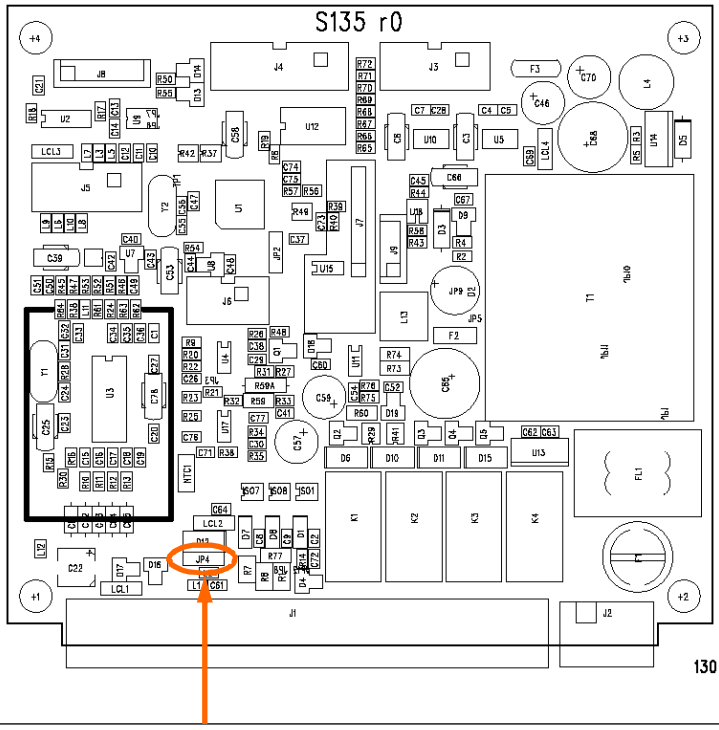

- **Voltage output:** jumper bridge **JP4** between the **central** and the **left pin**
- **Current output:** jumper bridge **JP4** between the **central** and the **right pin**

PROFIBUS-DP CONNECTION (OPTIONAL)

Profibus-DP connection is available as an **option** on the MC 102 instrument and is developed through the help of an external module installed in a container for assembly on the DIN guide.
The external Profibus module is identified by the code **S125**
The instrument is connected to the external Profibus module using the RS422 serial line.

A connection diagram for the two devices and a drawing of the Profibus-DP module are shown below:

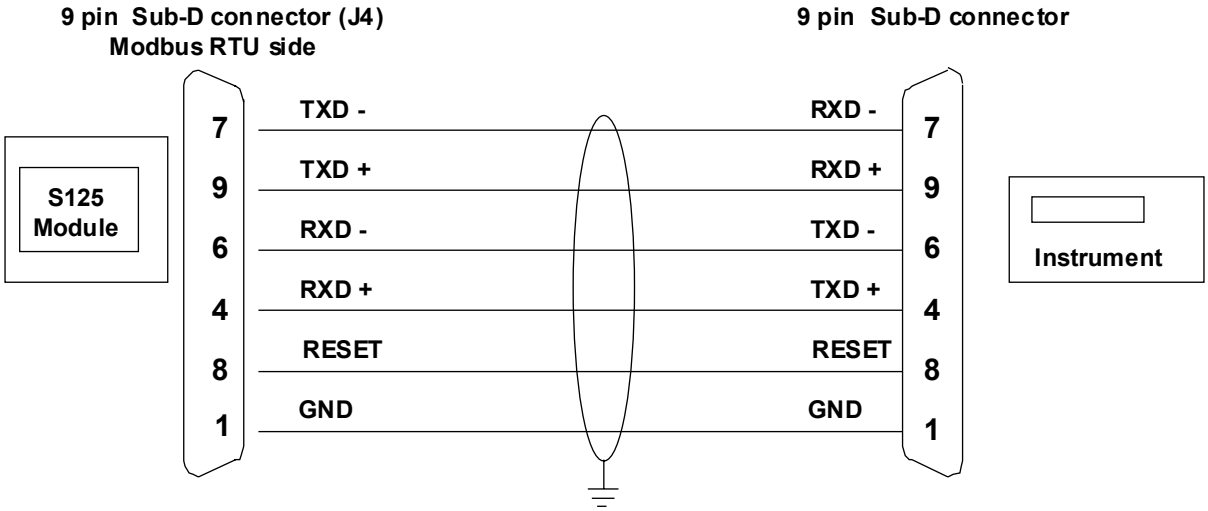

COM1 (RS232), limited to RX, TX and GND signals (without CTS), remains available on the same WIN11 instrument 9-pin connector. All the protocols, except MODBUS, can be activated.

MODBUS RTU CONNECTOR
TO MC302 INSTRUMENT

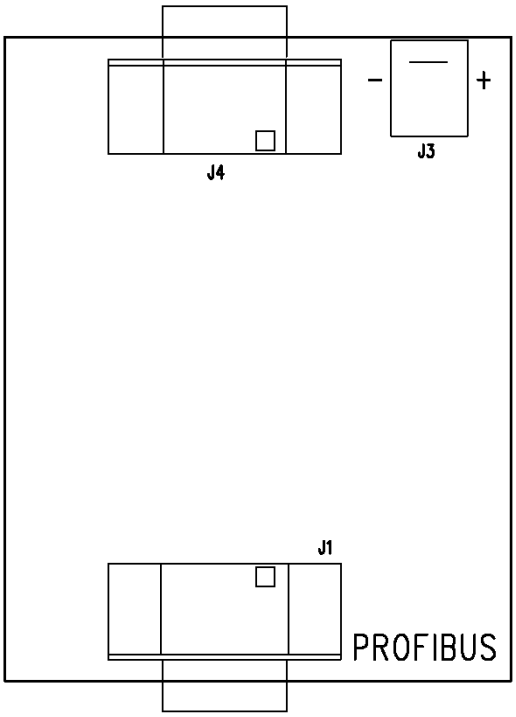

PROFIBUS-DP CONNECTOR
TO FIELDBUS SIDE

Operating Manual

CONTENTS

OPERATING FUNCTIONS

INSTRUMENT SET-UP

DISPLAY INDICATIONS

INSTRUMENT SWITCH ON

P02 0.3

During the switch-on procedure the instrument performs the display test, then the **ID Code** of the software version will appear. It is important to give this information to the Customer service in case of assistance.

WEIGHT INDICATION

During normal operation the display shows the value of the weight present on the weighing system. In this condition the instrument can be programmed.

INVALID WEIGHT BY THE SWITCH-ON
By the switch-on, normally the display shows the weight automatically. If not, the display shows this indication of **invalid weight**.

OVERLOAD INDICATION
The display shows this indication when the **gross weight** present on the weighing system **exceeds the max. capacity for more than 9 divisions.**

UNDERLOAD INDICATION
The display shows this indication when the **gross weight** present on the weighing system **is below zero for more than 9 divisions.**

no Con.

INDICATION OF LOAD CELL/S CABLE DISCONNECTED

ShortC.

SHORT CIRCUIT INDICATION
The display shows this message when there is a **short circuit condition** between the **Exc+** and **Exc–** wires or between the **Sense+** and **Sense–** wires of the load cell/s cable

no.S iG.

INDICATION OF LOAD CELL/S SIGNAL ABSENT OR TOO HIGH
The display shows this message when the **Signal+** and/or **Signal–** wires are **disconnected.** The same message is displayed also when the **mV/V signal** coming from the load cell/s is **higher than +3.9 mV/V**

Lo.S iG.

INDICATION OF LOAD CELL/S SIGNAL TOO LOW
The display shows this message when the **mV/V signal** coming from the load cell/s is **lower than –3.9 mV/V**

AdC.Err.

A/D CONVERTER INTERNAL ERROR
The display shows this message in case of an internal failure in the weight acquisition system.

no.CAL.

INSTRUMENT NOT YET CALIBRATED
The display shows this message in case no weight calibration has been made previously.

LED INDICATORS

C1 - C2	Reserved
Set 1, Set 2, Set 3, Set 4	**Relay outputs status** indication
Stable	Indicates the **stable weight** condition
Net	Switched-on when the display shows the **net weight**

ZERO SETTING AND TARE FUNCTIONS

GROSS / NET SELECTION

The net weight visualization is highlighted by the “Net” LED switched-on.

SETTING THE ZERO (SEMI-AUTOMATIC ZERO)

This command can be performed only when the GROSS weight visualization is selected

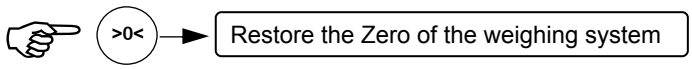

This operation can be done only when the weight is stable (or stabilizes within a timeout of 2 secs.). The max. weight that can be zeroed corresponds to the 2% (+ or -) of the maximum capacity of the weighing system, as regards to the zero performed during the last calibration procedure.
This command erases any tare value previously entered as “autotare” or “manual tare”.

AUTOTARE

This command can be performed only when the NET weight visualization is selected

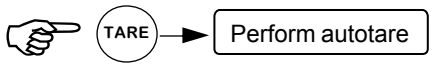

The weight present on the weighing system will be saved as tare and the display will show 0.

This operation can be done only when the weight is stable (or stabilizes within a timeout of 2 secs.) and the gross weight is positive.
In case of switching-off the instrument the tare value will be lost.

ENTRY OF A TARE MANUALLY

This command can be performed only when the NET weight visualization is selected

The weight value entered manually by the operator will be saved as tare and will be subtracted from the weight value previously displayed by the instrument.

This operation can be done only when the weight is stable (or stabilizes within a timeout of 2 secs.) and the gross weight is positive.
In case of switching-off the instrument the tare value will be lost.
The manual tare function cannot be performed if an autotare is already present.

The above procedures can be protected by a keyboard lock (see page 34)

OPERATING FUNCTIONS

DATA SETTING

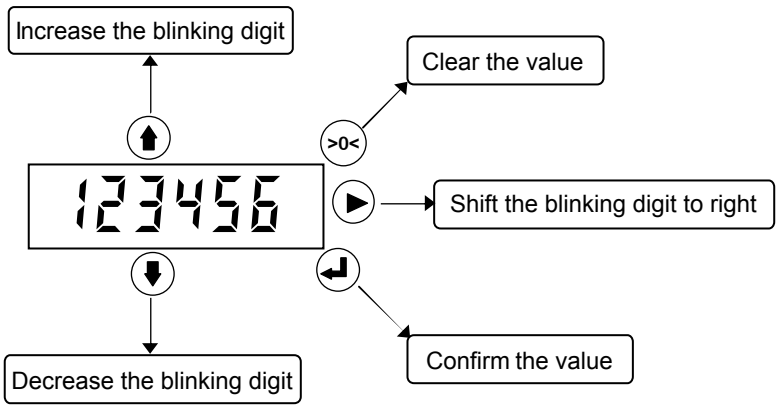

OPERATING FUNCTIONS MENU

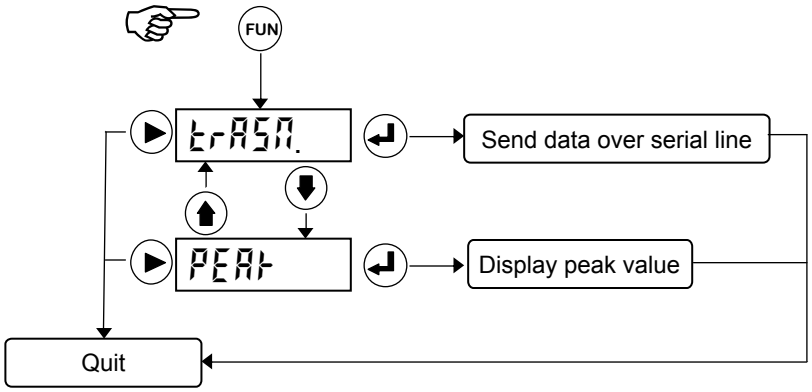

trASn.	**SEND DATA OVER THE SERIAL LINE** Refer to page 30 for the selection of the communication protocol. In case the communication protocol has been selected as "Pr int" the printed report will have the following layout: INSTRUMENT ID 01 GROSS WEIGHT 211.5 kg TARE 2.5 kg NET WEIGHT 209.0 kg
PEAk	**PEAK VALUE VISUALIZATION** The visualization of the peak value is highlighted by the letter "P" on the left of the display. When the Peak mode is enabled the following commands can be performed: G/N → Disable the Peak mode >0< → Clear the Peak value

SETTING THE SET-POINTS VALUES

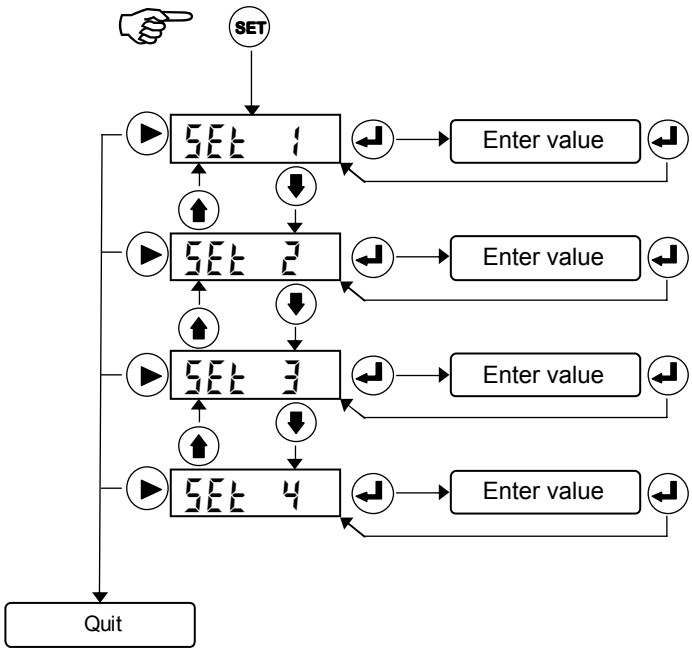

- The set-point values are compared with the weight in order to drive the relative relay output, according to the “set-points operating mode” described on page 23.
- During the setting of the set-point values all the relay outputs de-activates.
- Apart from the “set-points operating mode” described on page 23, in case the set-point value is = 0, the relative relay output will never activate, .
- When an error condition occurs (see page 19), all the relay outputs de-activates.

INPUT / OUTPUT FUNCTIONS

1	AUTOTARE (pulse)
2	ERASE TARE (pulse)
3	SEND DATA OVER THE SERIAL LINE (pulse)

1	SET-POINT 1
2	SET-POINT 2
3	SET-POINT 3
4	SET-POINT 4 / PROCESS (see “Set-points operating mode - Page 23-24”)

Refer to page 7 for wiring.

SET-POINTS OPERATING MODE

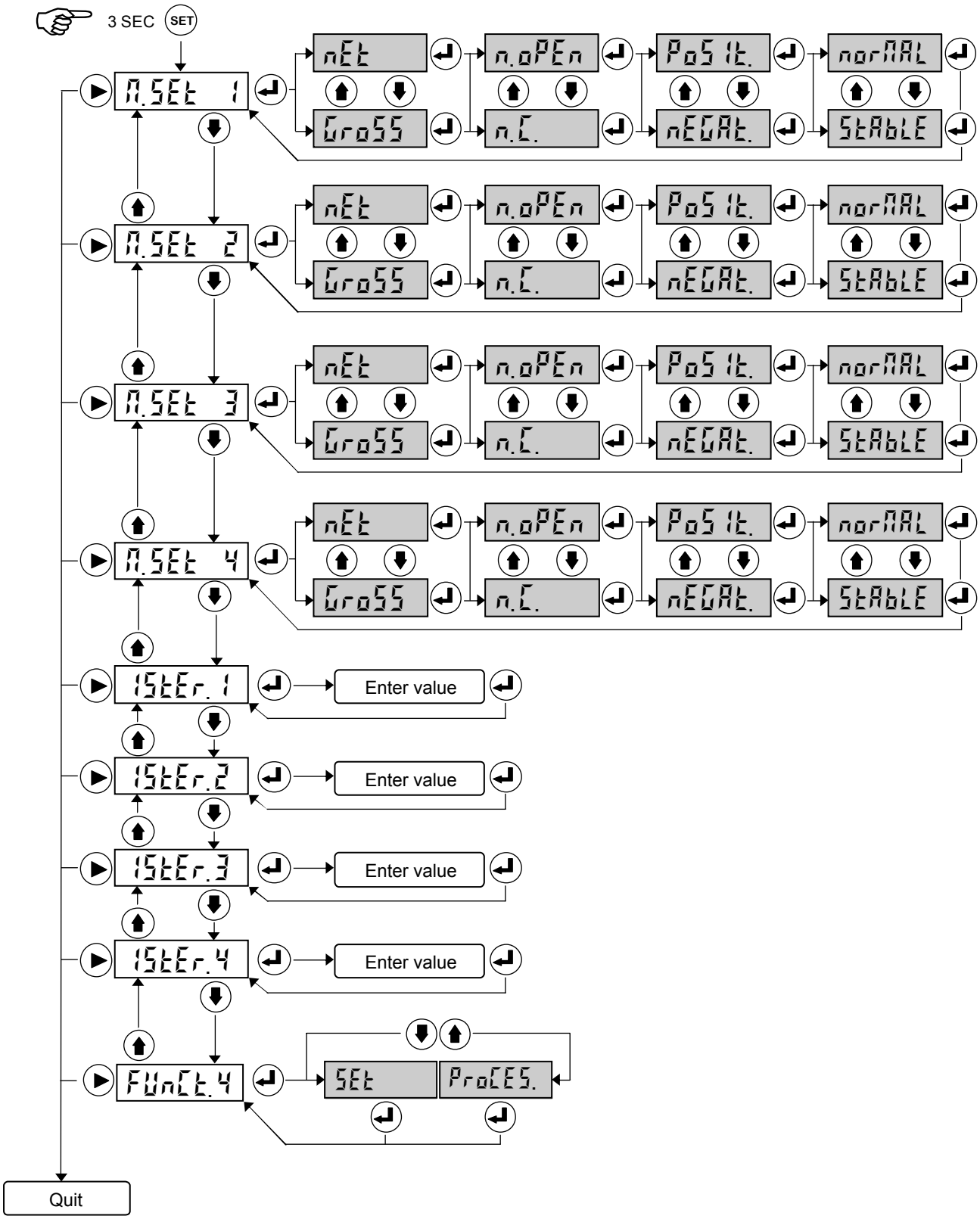

SET-POINTS OPERATING MODE

A. SEt 1-2-3-4	**NET / GROSS SELECTION:** The set-point is compared with the Net weight or with the Gross weight. **NORMALLY OPEN / NORMALLY CLOSED SELECTION** The relay output is normally open or normally closed below the set-point value **POSITIVE / NEGATIVE SELECTION:** The set-point is compared with positive weight values only or with negative weight values only. **NORMAL / STABLE SELECTION** When the weight reaches the set-point value the relay output activates immediately (NORMAL) or after the weight reading has stabilized (STABLE).
HSteR. 1-2-3-4	**SET-POINTS HYSTERESIS** An hysteresis value can be programmed for each set-point. Hysteresis is used to eliminate chattering of the relay at coincidence point. E.g. If Set-point 1 = 1000; Hysteresis 1 = 10 Relay output 1 activates at 1000 and de-activates at 990. An Hysteresis value = 0 or ≥ Set-point value disables the function **Default value: 2 counts**.

FUnct.4	**RELAY OUTPUT 4 OPERATING MODE** • **SET**: The relay output #4 is related to the Set-point #4 • **PROCESS**: The relay output #4 is active during normal operating mode. The relay output #4 de-activates each time a programming procedure is under-way. The only selection possible when “Process” is enabled is “N.Open” or “N.Closed”. The Hysteresis #4 value has no influence.

WEIGHING PARAMETERS (DATA-SHEET CALIBRATION)

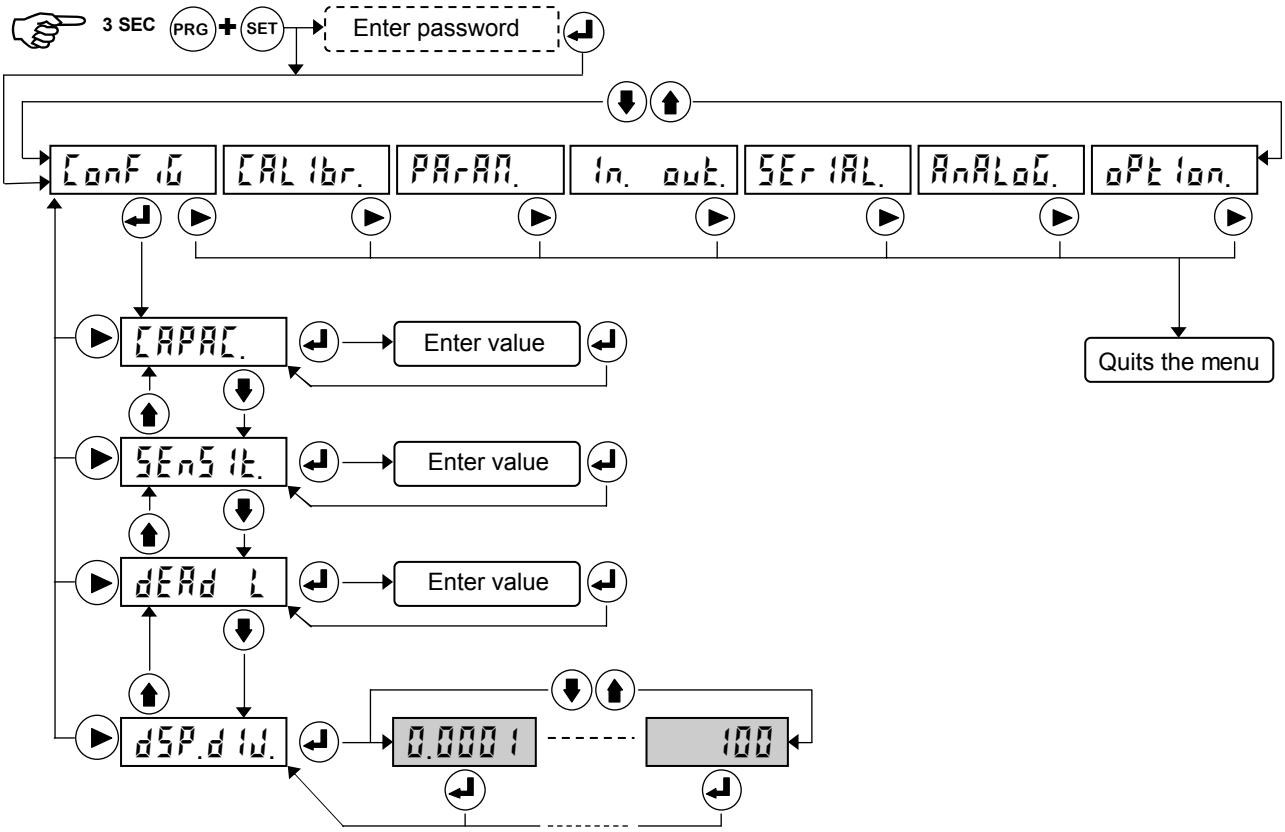

CAPAC.	**WEIGHING SYSTEM CAPACITY** Enter the total capacity of the load cell/s. In case of more than 1 load cell enter the sum of each total capacity. This value represents also the weighing system's full scale. Values between 1 and 500000 are accepted. By modifying the total capacity value, the Data-sheet calibration will be performed. **Default value: 30000**
SENSIT.	**LOAD CELL/S SENSITIVITY** Enter the rated output value of the load cell/s in mV/V. In case of more than 1 load cell enter the average value. Values between 0.5000 and 4.0000 mV/V are accepted. Without entering a value, the instrument takes 2.0000 mV/V automatically. By modifying the load cell/s sensitivity, the Data-sheet calibration will be performed. **Default value: 2.0000**
DEAD L	**DEAD LOAD VALUE** Enter the value corresponding to the dead load normally present on the load cell/s. Values between 0 and the weighing system capacity are accepted. By modifying the dead load value, the Data-sheet calibration will be performed. **Default value: 0**
DSP.DIV.	**DISPLAY DIVISION VALUE** The display division value can be selected between 0.0001 and 100. The ratio between the weighing system total capacity and the display division value represents the resolution of the instrument (number of divisions). By modifying the weighing system capacity, the instrument will select automatically a display division value based on a number of divisions ≤ 10000, however the user has the chance to modify the display division value bearing in mind that the resolution of the instrument can range from 500 to 100000 divisions. By modifying the display division value, if the max. capacity remains the same, the calibration is automatically updated. **Default value: 1**

DEAD-WEIGHT CALIBRATION

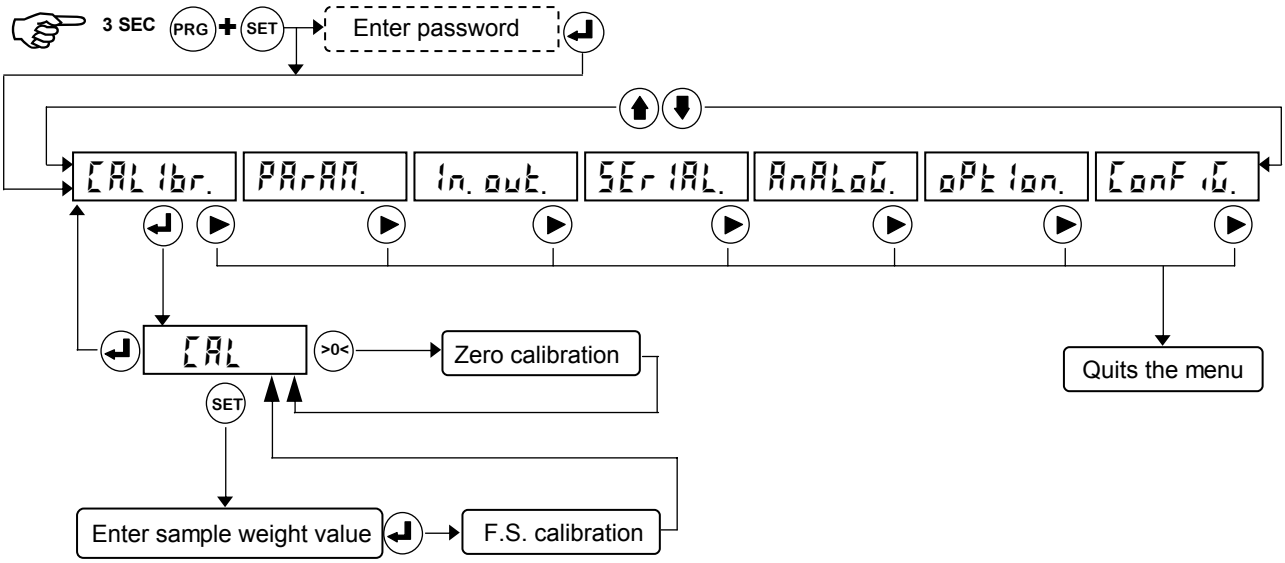

During the calibration procedure the message CAL blinks on the display

ZERO CALIBRATION	The Zero calibration must be done when the weighing system is unloaded. By pressing the >0< key the weight displayed will be zeroed. This procedure can be repeated more times.
FULL SCALE CALIBRATION	Load on the weighing system a known weight (sample weight) not less than 10% of the maximum capacity and wait for the stabilization, the display shows the value to be calibrated. Press the SET key, then enter the value of the sample weight loaded on the weighing system and press the PRG key to confirm the setting. The value will be accepted. If the value just entered is higher than the max. available resolution, the message Error is displayed and the full scale calibration is not accepted. In this case the user have to increase the display division value in order to reduce the resolution of the instrument (see dSPdiv parameter on page 25), then redo the full scale calibration procedure.

WEIGHING PARAMETERS SET-UP MENU

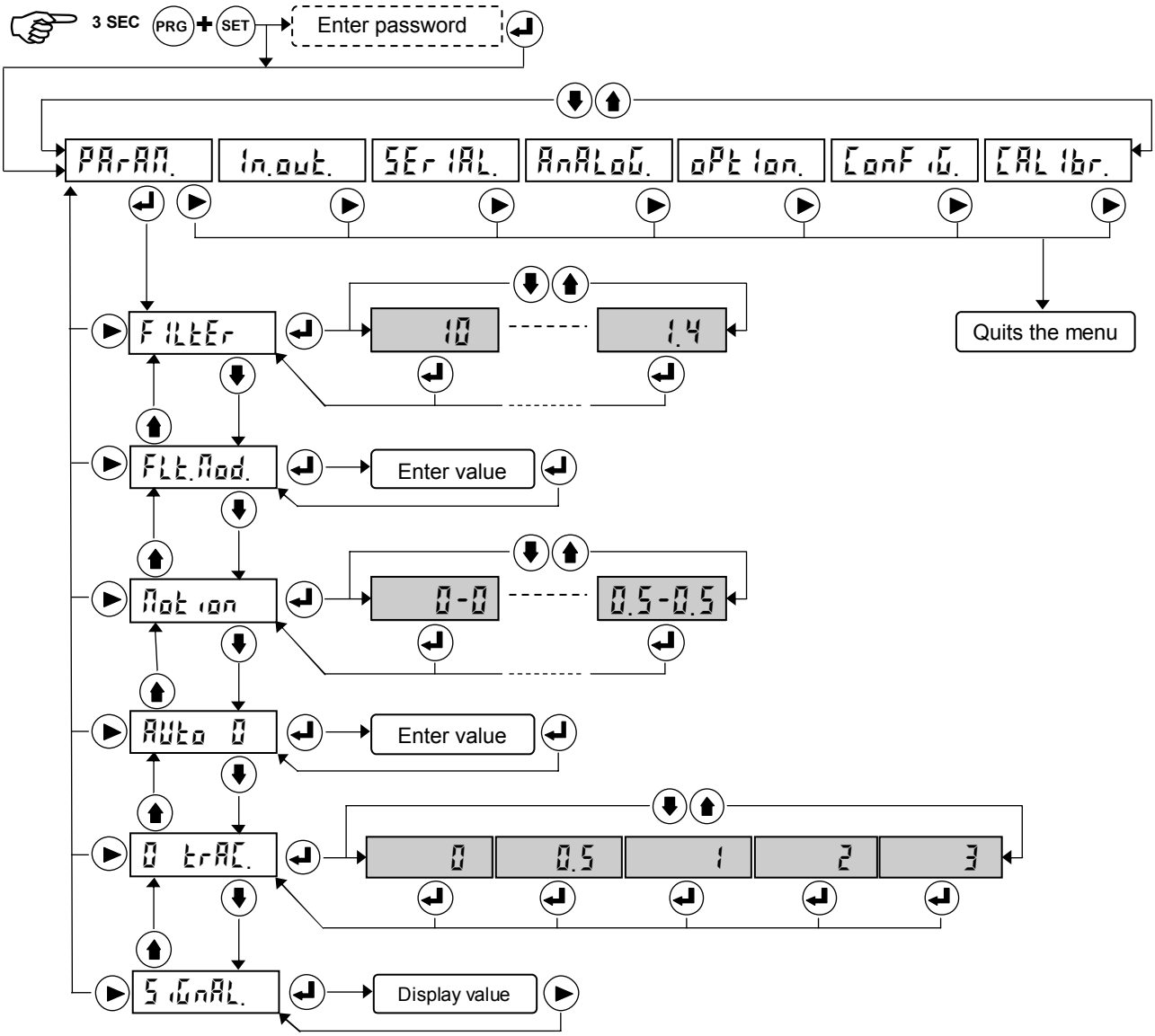

FILTER	**DIGITAL FILTER VALUE** The digital filter establish the update rate of the weight and affects all the weight values handled by the instrument (display, analog output, serial output, etc…). This parameter is programmable in Hz (updates per second) and can range from 1.4 to 10 Hz. **Default value: 3.2** High digital filter values cause very fast updates of the weight, while low values cause slow updates. This parameter does not affect the batching sequence, **during the batching sequence the weight is updated at a frequency of 100 Hz.**

Filter (Hz)	10	4	3.2	2.8	2.5	2.2	2	1.8	1.6	1.4

FLT.MOD.	**DIGITAL FILTER OPERATING MODE** This parameter allows to adjust the effect of the digital filter on the weight value according to different conditions (fast weight vibrations or fluctuations, disturbances, etc…). The value can range from 0 to 5. **Default value: 0**

WEIGHING PARAMETERS SET-UP MENU

Mot ion	**WEIGHT STABILITY** The weight is considered stable when it does not change within a certain time. The user has the chance to select one of the different combinations defined in the table here below. Setting the value 3 - 1 means to keep the stability condition even if the weight changes within 3 divisions in 1 second around a certain value. Of course the value 0.5 - 0.5 reduces to the minimum the weight range and the time. The value 0 - 0 excludes the stability check and, in this case, the weight is always considered stable. **Default value: 2 - 1** **Value** / **Parameter range** 0 - 0 / Stability check excluded 3 - 1 / 3 divisions in 1 second 2 - 1 / 2 divisions in 1 second 1 - 1 / 1 division in 1 second 0.5 - 1 / 0.5 divisions in 1 second 3 - 0.5 / 3 divisions in 0.5 seconds 2 - 0.5 / 2 divisions in 0.5 seconds 1 - 0.5 / 1 division in 0.5 seconds 0.5 - 0.5 / 0.5 divisions in 0.5 seconds
AUto 0	**AUTOZERO AT POWER-ON** This parameter is the max. weight value that can be zeroed **at power-on**. The autozero function consists in performing the **automatic zero calibration** when the instrument is **switched on**, but only if the weight present on the weighing system is stable and within the AUto 0 range. The value 0 disables the function. **Default value: 0**
0 trAC.	**ZERO TRACKING** Through this function the instrument performs the **automatic zero calibration** each time the weight has a slight fluctuation around zero due to temperature or mechanical drifts or to accumulation of dirt. The value 0 disables the function. The max. amount of weight that can be zeroed in one shot depends on the zero tracking value that can be selected according to the following list: **Zero tracking value** / **Parameter range** 0 / Disabled 0.5 / 0.5 div. / sec. 1 / 1 div. / sec. 2 / 2 div. / sec. 3 / 3 div. / sec. The zero tracking function is no more performed when the total number of tracked divisions exceeds the 2% (+ or - around zero) of the weighing system's maximum capacity. **Default value: 0**
SiGnAL.	**mV/V SIGNAL INPUT** This function allows to check the mV/V signal coming from the load cell/s. The displayed value cannot be modified

DIGITAL INPUTS AND RELAY OUTPUTS TEST

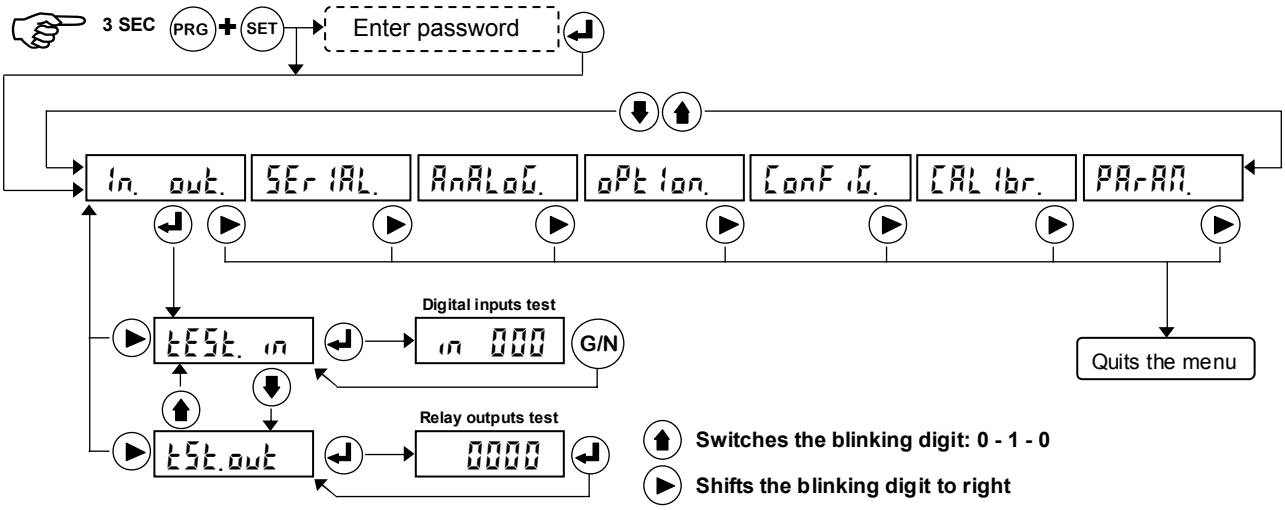

tEST. in	The display shows the status of the digital inputs. **0 = input de-activated 1 = input activated** The **1st digit on the left side of the display** corresponds to **Input 1** **Activate and de-activate the digital inputs (refer to page 7 for wiring) and check if the digits on the display change their status.**
tSt.out	During this procedure the relay outputs are not related to the set-point values, but they are used to check the hardware. **0 = output de-activated 1 = output activated** The **1st digit on the left side of the display** corresponds to **Output 1** Press the ⬆ key to switch the blinking digit from 0 to 1. Connect a digital meter (ohm) to the terminals **17 - 13; 17 - 14; 17 - 15; 17 - 16** (refer to page 7 for wiring) to check if the relay contacts change their status when switching the blinking digit to from 0 to 1

SERIAL COMMUNICATIONS SET-UP

This submenu allows to configure the communication parameters of the COM1 and COM2 serial ports. The instrument is equipped with two independent COM ports both on one connector (9 pin Sub-D).
COM1: RS232 **COM2: RS422 / RS485**

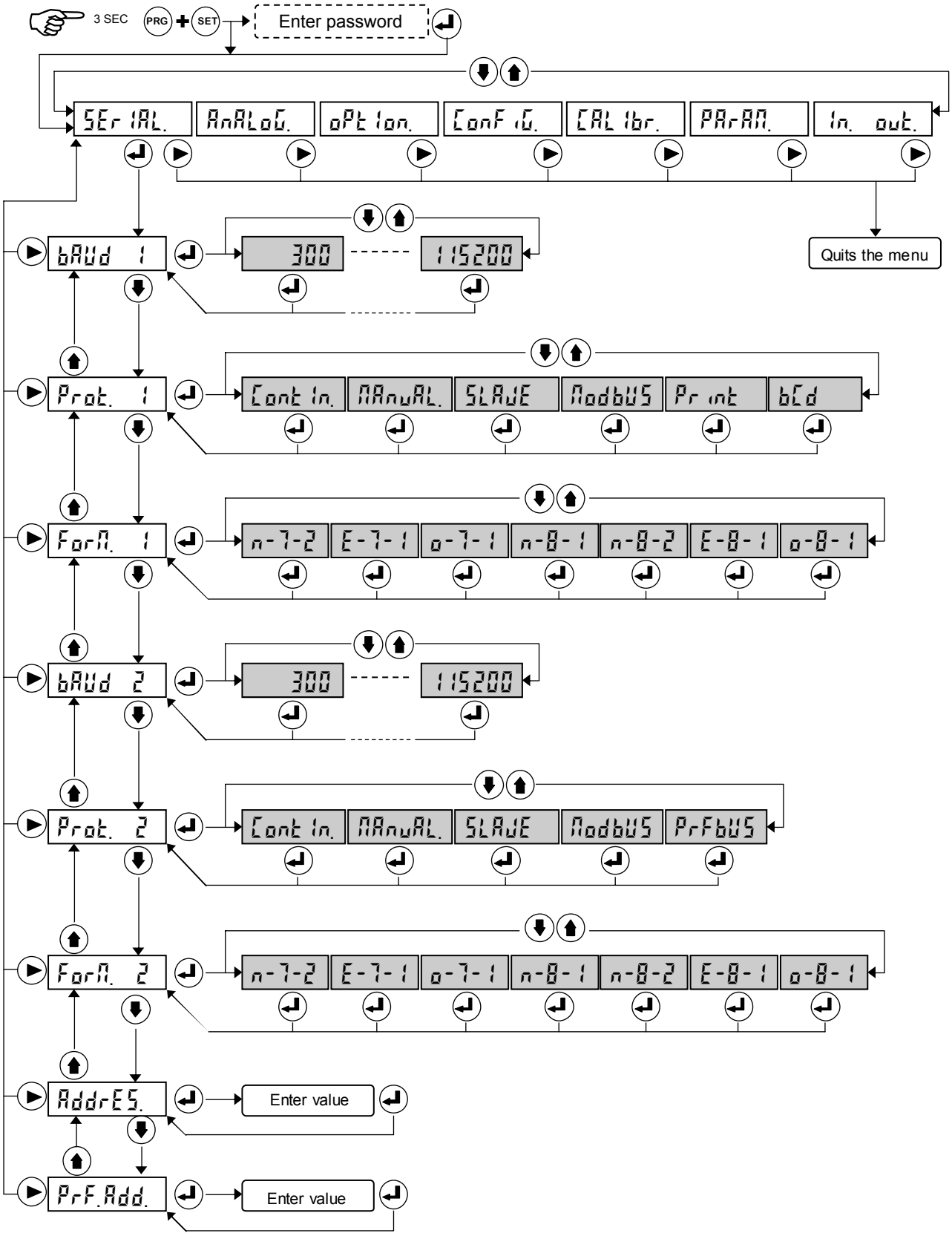

SERIAL PORTS CONFIGURATION

bAud 1	**COM1 BAUD RATE SELECTION (RS232)** 300 - 600 - 1200 - 2400 - 4800 - 9600 - 14400 - 19200 - 28800 - 38400 - 57600 - 76800 - 115200 **Default value: 9600**
Prot. 1	**COM1 PROTOCOL SELECTION (RS232)** Cont in **CONTINUOUS data string transmission** (i.e. remote display) transmission frequency 5 Hz. MAnuAL **Data string transmission** through **PRG** key or remote input. SLAVE **MASTER / SLAVE protocol** (See page 35) ModbuS **MODBUS RTU protocol** (See page 37) Print **Data string transmission to a PRINTER** bCd **Data string transmission to a BCD external board (option)**
ForM. 1	**COM1 DATA FORMAT SELECTION (RS232)** Parity, Data bits, Stop bit **Default value: 8 - n - 1**
bAud 2	**COM2 BAUD RATE SELECTION (RS422 / RS485)** 300 - 600 - 1200 - 2400 - 4800 - 9600 - 14400 - 19200 - 28800 - 38400 - 57600 - 76800 - 115200 **Default value: 9600**
Prot. 2	**COM2 PROTOCOL SELECTION (RS422 / RS485)** Cont in **CONTINUOUS data string transmission** (i.e. remote display) transmission frequency 5 Hz. MAnuAL **Data string transmission** through **PRG** key or remote input. SLAVE **MASTER / SLAVE protocol** (See page 35) ModbuS **MODBUS RTU protocol** (Refer to page 37 for details) PrFbuS **Profibus-DP protocol** (Refer to page 38 for details)
ForM. 2	**COM2 DATA FORMAT SELECTION (RS422 / RS485)** Parity, Data bits, Stop bit **Default value: 8 - n - 1**
AddrES	**SERIAL ADDRESS SELECTION (INSTRUMENT ID)** From 01 to 32 **Default value: 01**
PrF.Add.	**PROFIBUS ADDRESS SELECTION** From 000 to 126. When this protocol is selected the external Profibus module S125 (option) must be used.

OPTIONAL ANALOG OUTPUT SET-UP AND TEST

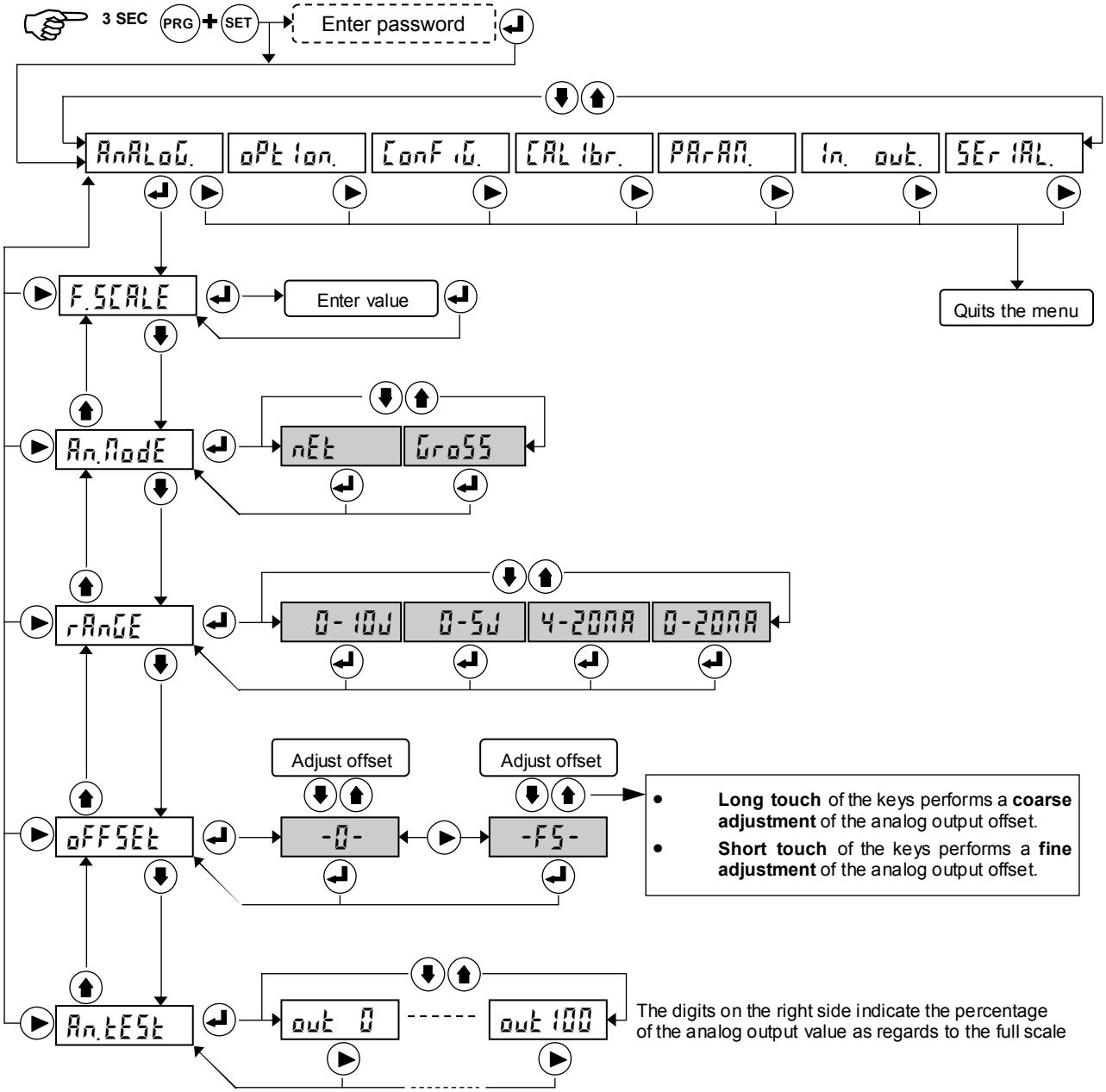

The analog output update frequency depends on the digital filter value (FILtEr parameter, page 27)

When the weight is invalid (weight out of range or not yet detected after switching the instrument on), the analog output signal takes the minimum value (–0.4 mA or –0.2 V).

OPTIONAL ANALOG OUTPUT SET-UP AND TEST

F.SCALE	**ANALOG OUTPUT FULL SCALE VALUE** Weight value to which the full scale of the analog output has to correspond. **Default value: same as CAPAC. (see page 25)**
An.ModE	**NET / GROSS SELECTION** Refer the analog output to the **NET** weight or to the **GROSS** weight. **Default value: NET**
rAnGE	**ANALOG OUTPUT RANGE SELECTION** (0-5V, 0-10V, 0-20mA, 4-20mA) The analog output hardware (**voltage** or **current**) is selected in the factory before shipping the instrument (see page 14). The **current** output can range from **0 to 20 mA** or from **4 to 20 mA**. The **voltage** output can range from **0 to 5 V** or from **0 to 10 V**. The analog output can take the following min. and max. values: **Current:** from **– 0.4 mA** to **+ 21.5 mA** approx. **Voltage:** from **– 0.2 V** to **+ 10.5 V** approx. The analog output is the result of the weight value D/A (Digital to Analog) conversion. Resolution is 16 bit (65535 counts) and is not affected by the Full scale weight calibration **Default value: NET**
oFFSEt	**ZERO AND FULL SCALE OFFSET ADJUSTMENT** To perform this procedure a digital multimeter is needed; connect the black probe to terminal #7 (-) and the red probe to terminal #8 (+) of the WIN11 17 pin terminal block. Place the instrument in “zero offset adjustment” mode (display indicates -0-), then adjust the zero offset until the digital multimeter indicates “0.00” Switch to “full scale adjustment” mode (display indicates -FS-), then adjust the full scale offset until the digital multimeter indicates “5.00” or “10.00” V in case of voltage, or “20.00” mA in case of current (this depends on how the rAnGE parameter has been selected).
An.tESt	**ANALOG OUTPUT TEST PROCEDURE** To perform this procedure a digital multimeter is needed; connect the black probe to terminal #7 (-) and the red probe to terminal #8 (+) of the WIN11 17 pin terminal block. Through this procedure it is possible to generate an analog output value based on a percentage that can range from 0 to 100%.

OTHER SETTINGS SET-UP MENU

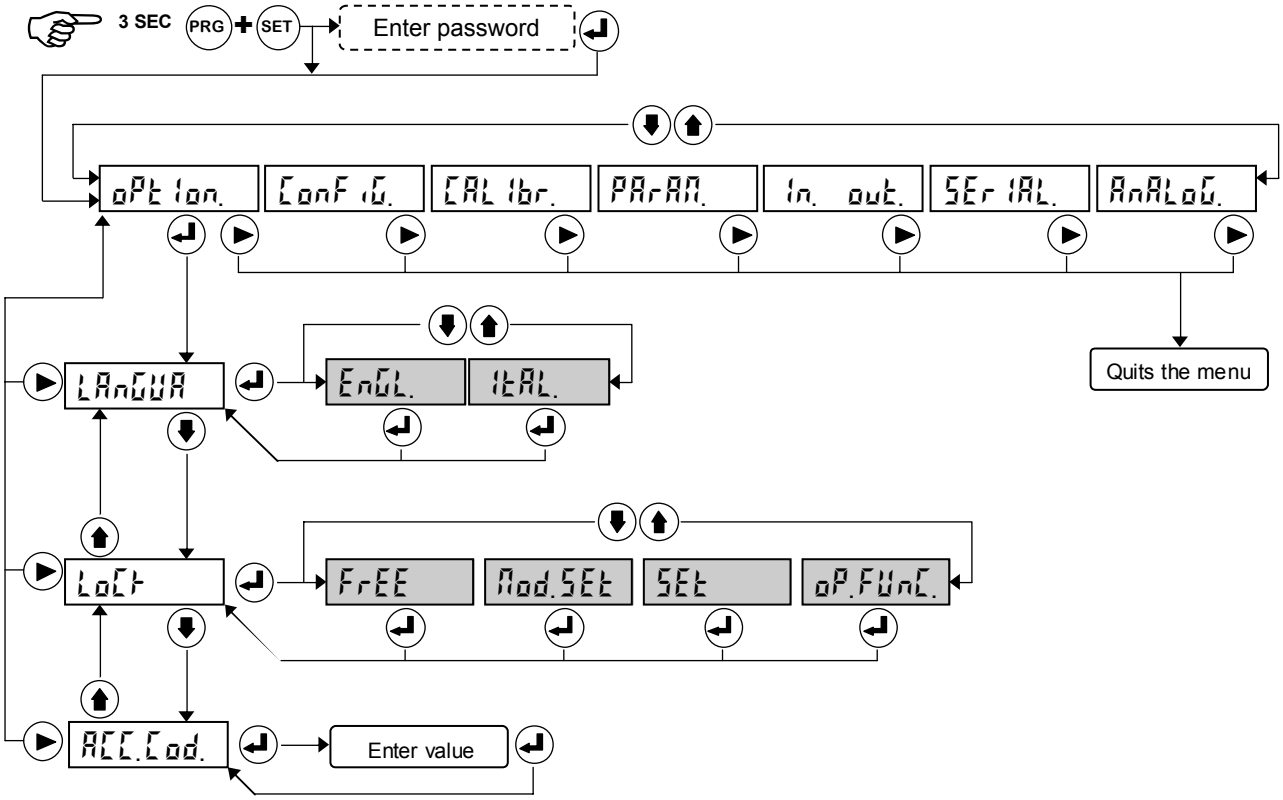

LAnGuA.	**DISPLAY AND PRINTOUTS LANGUAGE SELECTION** English, Italian
LoCk	**KEYBOARD LOCKOUT SELECTION** FrEE **KEYBOARD COMPLETELY UNLOCKED** Any of the settings can be accessed by the operator Mod.SEt Changes to “Set-points operating mode” (page 23) are prevented. SEt Changes to “Set-point values” (page 22) and “Set-points opearating mode” (page 23) are prevented. oP.FUnC. **KEYBOARD COMPLETELY LOCKED** All the settings are prevented. Only the Set-up menu can be accessed (PRG and SET keys pressed together for 3 secs.)
ACC.Cod.	**PASSWORD TO ACCESS THE SET-UP MENU** Enter the 4 digits password that will be used to access the set-up menu. When pressing the PRG and SET keys together for 3 secs. the password will be required, if programmed.

SERIAL COMMUNICATION PROTOCOLS

CONTINUOUS AND MANUAL TRANSMISSION PROTOCOLS

These protocols are normally used for the communication to a PC or a PLC.
The CONTINUOUS transmission can also be used to send data to a remote display.
The instrument transmits the following data string at a frequency of 5 Hz:

STX <status> <net> ETX <chksm> EOT

<status> = character code as below (bit = 1 if condition is TRUE):

Bit 7	Bit 6	Bit 5	Bit 4	Bit 3	Bit 2	Bit 1	Bit 0
0	0	1	1	Preset tare	Minimum weight	Stable weight	Centre of zero

<net> = field consisting of 8 ASCII characters with the weight value right justified.
The characters can take values from "0" to "9" (30h and 39h), "space" (20h) or decimal point "**.**" (2Eh).
By negative weight value the 1st character of the <net> field corresponds to "-" (2Dh).
By overload condition the field take value "**^^^^^^^^**".
By underload condition the field take value "**_ _ _ _ _ _ _ _**".

<chksm> = checksum of the data string.
It is calculated by performing the exclusive OR (XOR) of all the ASCII characters from STX (or <Addr>) to ETX (STX or Adrr and ETX are not included in the checksum caculation).
The result of the XOR is shared into 2 characters: the 1st character refers to the 4 Most Significant Bits, while the 2nd character refers to the 4 Least Significant Bits. The 2 characters are later configured as ASCII. (i.e. : XOR = 5D → <chksm> = 5D).

SLAVE PROTOCOL

For this protocol is not possible to select a 7 bit data format.

LIST OF COMMANDS:

1. Programming a Tare value
2. Autotare command
3. Semi-automatic zero command
4. Net weight and Tare value request
5. Programming the 4 setpoint values.
6. Reading the 4 setpoint values.

The unit connected to the instrument (usually a PC or a PLC) acts as a Master and is the only unit which can start a communication procedure.
The communication procedure consists in a transmission string from the Master, followed by a response from the Slave.

COMMANDS DESCRIPTION:

The inverted commas include the fixed characters (case sensitive), the < and > characters include variable numeric fields.

1. PROGRAMMING A TARE VALUE

MASTER: **<Addr> "T" <tare value> ETX <chksm> EOT**
SLAVE: **<Addr> "T" Ack EOT** <u>or</u> **<Addr> Nak EOT**

2. AUTOTARE COMMAND

MASTER: **<Addr> "tara" EOT**
SLAVE: **<Addr> "tara" Ack EOT** **or** **<Addr> Nak EOT**

3. SEMI-AUTOMATIC ZERO COMMAND

MASTER: **<Addr> "zero" EOT**
SLAVE: **<Addr> "zero" Ack EOT** **or** **<Addr> Nak EOT**

4. NET WEIGHT AND TARE VALUES REQUEST

MASTER: **<Addr> "N" EOT**
SLAVE: **<Addr> "N" <status> <net> <tare> ETX <chksm> EOT**
or **<Addr> Nak EOT**

5. PROGRAMMING THE 4 SETPOINT VALUES

MASTER: **<Addr> "S" <s1> <s2> <s3> <s4>ETX <csum> EOT**
SLAVE: **<Addr> "S" ACK EOT** **or** **<Addr> NAK EOT**

6. READING THE 4 SETPOINT VALUES

MASTER: **<Addr> "R" EOT**
SLAVE: **<Addr> "R" <s1> <s2> <s3> <s4>ETX <csum> EOT**
or **<Addr> NAK EOT**

CHARACTERS USED IN THE STRINGS:

<Addr> = Instrument address, is the ASCII character obtained by summing 80h to the address number (i.e. : instrument address = 1 ➔ **<Addr>** = 1h + 80h **= 81h**).

<chksm> = Checksum of the data string.
Calculated by performing the exclusive OR (XOR) of all the ASCII characters from STX (or <Addr>) to ETX (STX or Addr and ETX are not included in the checksum caculation). The result of the XOR is shared into 2 characters: the 1st character refers to the 4 Most Significant Bits, while the 2nd character refers to the 4 Least Significant Bits. The 2 characters are later configured as ASCII. (i.e. : XOR = 5D ➔ <chksm> = 5D).

<status> = Character code as below (bit = 1 if condition is TRUE):

Bit 7	Bit 6	Bit 5	Bit 4	Bit 3	Bit 2	Bit 1	Bit 0
0	0	1	1	Preset tare	Minimum weight	Stable weight	Centre of zero

<tare> = field consisting of 7 ASCII characters with the weight value on the right side.
The characters can take values from "0" to "9" (30h and 39h), "space" (20h) or decimal point "**.**" (2Eh).
The position of the decimal point has to match with the one of the instrument's display

<net> = field consisting of 7 ASCII characters with the weight value on the right side.
The characters can take values from "0" to "9" (30h and 39h), "space" (20h) or decimal point "**.**" (2Eh).
By negative weight value the 1st character of the <net> field corresponds to "-" (2Dh).
By overload condition the field take value "**^^^^^^^**".
By underload condition the field take value "**_ _ _ _ _ _ _**".

THE MODBUS RTU PROTOCOL

Functions supported: READ HOLDING REGISTER (03) and PRESET SINGLE REGISTER (06)

HOLDING REGISTERS

Address	Description	R/W
40011	Status register	R
40012	Net weight H (signed)	R
40013	Net weight L (signed)	R
40014	Decimal point	R
40018	Net weight string (characters 1 and 2)	R
40019	Net weight string (characters 3 and 4)	R
40020	Net weight string (characters 5 and 6)	R
40021	Net weight string (characters 7 and 8)	R
40030	Command register	W

Address 40011 (Status register)

Bits = 1 have the following meaning

Bit	Description
0	Centre of zero
1	Stable weight
2	Minimum weight
3	Preset tare
4	Valid weight
5	Underload condition
6	Overload condition
7	Out of range condition

Address 40030 (Command register)

By writing the following values in the address 40030 the relative function is performed

7	8	9
Autotare	Semi-automatic Zero	Erase tare

Note: By writing the value “9” in the Command Register both the autotare and a manual tare value previously entered by the front panel keys will be erased.

INFORMATION ON THE MODBUS ADDRESSES 40018 TO 40021 (Net weight string)

This group of addresses represents the **net weight value expressed in ASCII codes** and is used for the communication to an optional touch screen panel, which can be interfaced with the instrument for special applications.

The following operations can be performed through the touch screen panel:

- Weight value and LED’s status display
- Autotare and Preset tare
- Semi-automatic zero
- Operating data display and programming

The following example shows how a net weight value of 125974 kg is represented. The **1st line** (DEC) represents the **decimal characters**, while the **2nd** line represents the **ASCII characters**, just as they are read through the Modbus RTU protocol.

	Address 40018		Address 40019		Address 40020		Address 40021	
	Character 1	Character 1	Character 1	Character 1	Character 1	Character 1	Character 1	Character 1
DEC	0	0	1	2	5	9	7	4
ASCII	30	30	31	32	35	39	37	34

For further information on the Modbus RTU protocol please refer to the general technical specs. PI_MBUS_300

THE BCD PROTOCOL

The serial transmission to the BCD optional board cannot be configured and is a dedicated transmission.
The output update frequency is 10 Hz, the baud rate is 9600 and the data format is N-8-1; consequently it is necessary to program the COM1 port of the instrument with these parameters.
The BCD board represents the **gross weight** only.
The **maximum value** that can be represented is **39999.**
With a weight over the maximum capacity or with an invalid weight all the outputs are activated, while the polarity output operates normally.

THE PROFIBUS-DP PROTOCOL

The Profibus-DP protocol is managed by the optional S125 external module that is connected to the WIN11 through the RS422 serial port.
The communication between the WIN11 and the S125 module is based on the Modbus RTU protocol at 38400 bps.

POSSIBLE ERRORS:

1) **E-PROF** The connection between the WIN11 and the Profibus module S125 is missing. After several connection attempts the communication is interrupted.

This error occurs in the following cases:
- Communication timeout during normal operating mode (5 timeouts in succession).
- S125 module not detected during the initialization procedure (5 timeout in succession).

In both cases a hardware reset procedure is started by the instrument. In case of further 5 timeouts in succession the communication with the S125 module is disabled definitively.

2) **NO COM** The Profibus network connection is missing. Automatically disappears when Profibus network connection is restored.

3) **ERR CRC** CRC error in the Modbus communication.

This error is pointed out when a data string error occurs. Automatically disappears when a data string is received correctly.

Errors priority: 1), 3), 2).

The response timeout of the S125 module is 100 mS.

PROFIBUS INPUT DATA AREA

Byte	Parameter
0 - 1	Instrument error register
2 - 3	Status register
4 - 5	Gross weight (H) (signed)
6 - 7	Gross weight (L) (signed)
8 - 9	DP position (Gross Weight)
10 - 11	Net weight (H) (signed)
12 - 13	Net weight (L) (signed)
14 - 15	DP position (Net Weight)

PROFIBUS OUTPUT DATA AREA

Byte	Parameter
0 - 1	Command register

Instrument error register

Value	Meaning
00	Normal operating mode
03	Out of range
05	Overload
07	Underload

Command register

Value	Function
07	Autotare
08	Semi-automatic zero
09	Erase tare

Status register

Bit	Description
0	Centre of zero
1	Stable weight
2	Minimum weight
3	Preset tare
4	Valid weight
5	Underload condition
6	Overload condition
7	Out of range condition

PROFIBUS S125 MODULE SPECIFICATIONS (AnyBus-IC PDP)

AnyBus-IC PDP is a module designed for communication within a Profibus-DP network and acts as a Profibus-DP **slave** module.

Main features:

- **32 bytes input / 32 bytes output**
  The significant bytes in the WIN11 communication protocol are:
  16 for the Profibus input area (16 bytes from 0 to 15, see “Profibus Input Data Area” page 38)
  2 for the Profibus output area (2 bytes from 0 to 1, see “Profibus Input Data Area” page 38)

- **Support of all the baud rates from 9.6 kbit/s to 12 Mbit/s**
  The module automatically adjusts its communication speed to match that of the Master

- **Galvanic insulation**
  The module is separated from other electronic devices through a DC/DC converter.
  The transmission and reception signals are isolated through opto-isolators.

Profibus ID number

The Profibus ID number of the AnyBus-IC module (shown in the GSD file) is **1810h**

TROUBLE SHOOTING

PROBLEM	POSSIBLE CAUSE	POSSIBLE SOLUTION
The serial communication doesn't work properly	• Wiring is wrong • The serial port is not correctly configured	• Check the wiring as recommended on pages 8 to13. • Select the serial parameters in the proper way
The semi-automatic zero function doesn't work	• The gross weight is higher than the semi-automatic zero range • The weight is unstable	• The zero calibration must be performed • Wait for the stability or adjust the digital filter value
The autotare function doesn't work	• The gross weight is negative or higher than the maximum capacity • The weight is unstable	• Check the gross weight • Wait for the stability or adjust the digital filter value
The messages on the display and on the printouts do not match with those written in this manual	• The selected language is not English	• Select the English language
The keyboard doesn't work or it isn't possible to access the configuration menu	• The keyboard is locked • The password to access the menu has been activated	• Check the keyboard lock and the password